UNIVERSITY OF RUHUNA

Faculty of Engineering

End-Semester 2 Examination in Engineering: December 2018

Module Number: ME2302 **Module Name: Introduction to Materials Science and Manufacturing Engineering**

[Three Hours]

[Answer **all questions,** All Questions carries TEN marks]

Part A

Q1. a) I. Compare "slab milling operation" and "end milling operation".

II. Name three different types of milling machines and compare their construction.

[4.0 Marks]

b) I. Draw a neat sketch of a shaping machine and name the main parts of it.

II. Explain the main function of a "clapper box" in a shaping machine.

[3.0 Marks]

c) I. Describe **four** methods to produce a taper in a lathe machine.

[3.0 Marks]

Q2. a) Identify the labeled items shown in the sectional view (shown in **Figure Q2.a**) of the sand casting (numbered 1 to 7)

[2.0 Marks]

b) I. Briefly explain **three** types of allowances that are used for a pattern in sand casting.

II. In a particular cast object "cold shut" casting defect was detected. Will it be possible to eliminate this defect by redesigning the mould with a blind riser? Explain.

[5.0 Marks]

c) The blank shown in **Figure Q2.c** is to be sand cast out of an aluminum alloy. Make a sketch of the wooden pattern for this part, and show all necessary steps in preparing the mould.

[3.0 Marks]

Q3. a) Name the Figures [(a) to (j)] shown in Table Q3.

[6.0 Marks]

b) I. What is a sine bar?

II. Explain the procedure to use it using a sketch.

III. Discuss the limitations of the use of a sine bar.

[4.0 Marks]

Part B

Q4. a) For each of the following classes of materials, give two specific examples that are a regular part of your life:

I. metals;

II. ceramics;
III. polymers; and
IV. semiconductors.

[1.5 Marks]

b) Describe the enabling materials property of each of the following and why it is so,
   I. aluminum for airplane bodies,
   II. polyurethane for teeth aligners (invisible braces),
   III. steel for the ball bearings in a bicycle's wheel hub;
   IV. polyethylene terephthalate for water bottles, and
   V. glass for wine bottles.

[2.5 Marks]

c) What are some of the typical characteristics of ceramic materials?

[1.0 Mark]

d) You would like to select a material for the electrical contacts in an electrical switching device that opens and closes frequently and forcefully. What properties should the contact material possess? What type of material might you recommend? Would Al_2O_3 be a good choice? Explain.

[1.5 Marks]

e) Define,
   I. a thermoplastic,
   II. thermosetting plastics,
   III. elastomers.

[1.5 Marks]

f) What are linear and branched polymers? Can thermoplastics be branched?

[1.0 Mark]

g) What are the major advantages of plastics compared to ceramics, glasses, and metallic materials?

[1.0 Mark]

Q5. a) Calculate the atomic radius in cm for the following,
   I. BCC metal with a_o = 0.3294 nm, and
   II. FCC metal with a_o = 4.0862 Å.

[1.0 Mark]

b) Determine the indices for the directions in the cubic unit cell shown in **Figure Q5.a.**

[2.0 Marks]

c) Determine the indices for the planes in the cubic unit cell shown in **Figure Q5.b.**

[1.5 Marks]

d) Determine the planar density and packing fraction for FCC nickel in the
   I. (100),
   II. (110), and
   III. (111) planes.

   Which, if any, of these planes are close packed?

[1.5 Marks]

e) What properties should the head of a carpenter's hammer possess? How would you manufacture a hammer head?

[1.0 Mark]

f) The data as shown in **Table Q5** were collected from a 12 mm diameter test specimen of magnesium (l_o = 30.00 mm):
After fracture, the total length was 32.61 mm and the diameter was 11.74 mm.
Plot the engineering stress–strain curve and calculate,

I. the 0.2% offset yield strength;
II. the tensile strength;
III. the modulus of elasticity;
IV. the % elongation;
V. the % reduction in area;
VI. the engineering stress at fracture.

Table Q5

Load (N)	Δ/(mm)
0	0.0000
5000	0.0296
10000	0.0592
15000	0.0888
20000	0.15
25000	0.51
26500	0.90
27000	1.50(maximum load)
26500	2.10
25000	2.79 (fracture)

[3.0 Marks]

Q6. a) Properties of the ferrous alloys with same composition can be altered by following different heat treatments.

I. Compare the differences between "full annealing" and "quenching" heat treatment process.

[2.0 Marks]

II. Explain briefly, why strength of low carbon steel cannot be achieved by quenching.

[1.0 Mark]

III. Describe briefly, the properties and applications of stainless steel.

[2.0 Marks]

b) A composite material is composed of at least two materials, which combine to give properties superior to those of the individual constituents and have been used in various sectors.

I. Classify the composite materials according to the reinforcement geometry. Give example for ease one.

[1.5 Marks]

II. Discuss the impact of the fiber orientation on performance of composite materials. Use neat sketches.

[1.5 Marks]

III. Write a short note on **metal matrix composite**.

[2.0 Marks]

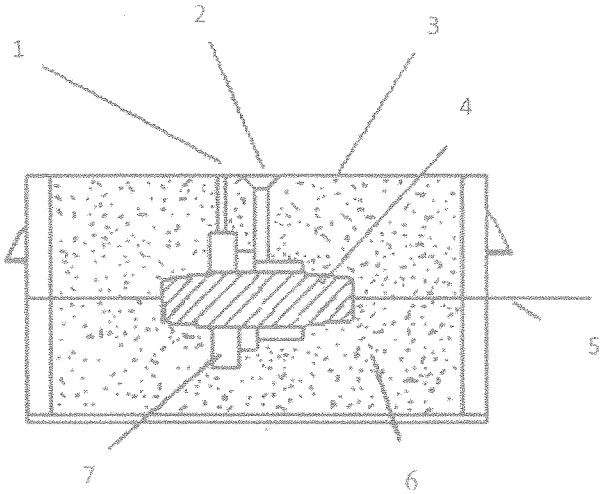

Figure Q2.a

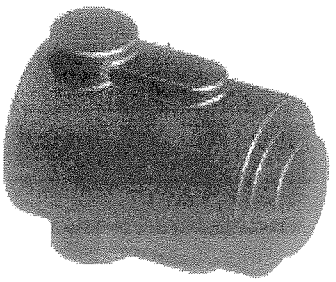

Figure Q2.c

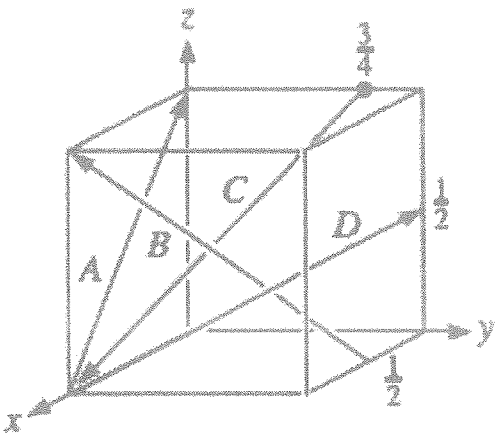

Figure Q5.a

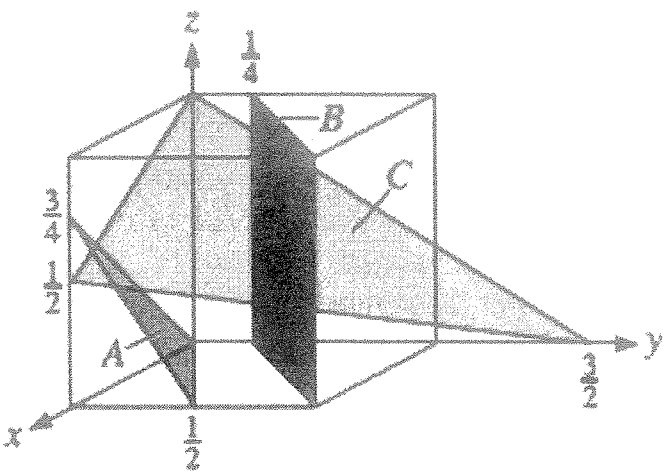

Figure Q5.b

Table Q3

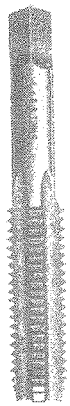

(a)

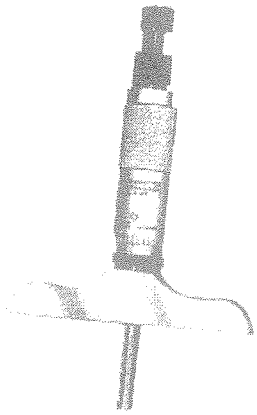

(b)

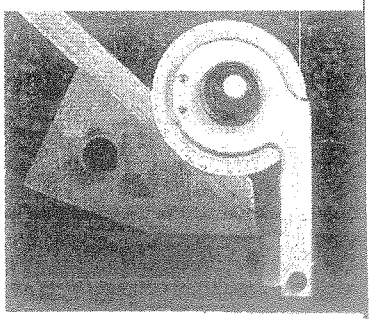

(c)

(d)

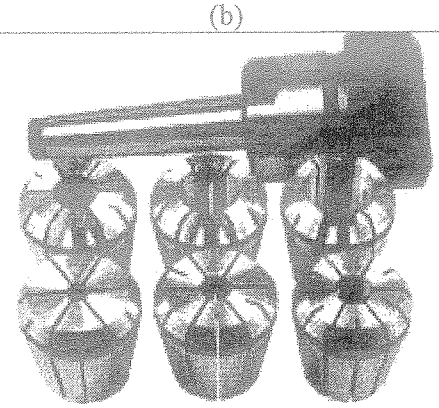

(e)

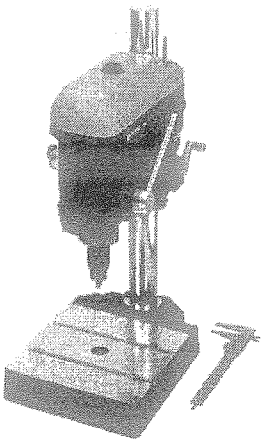

(f)

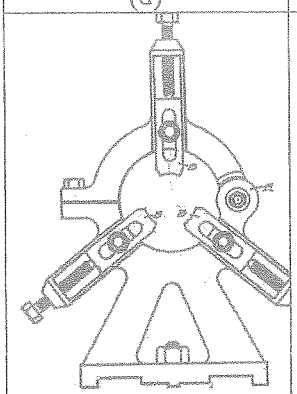

(g)

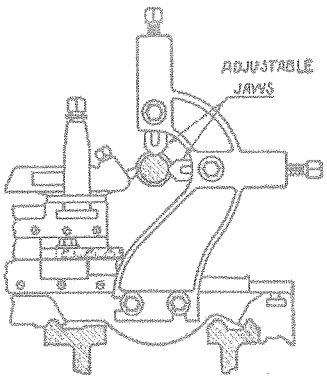

(h)

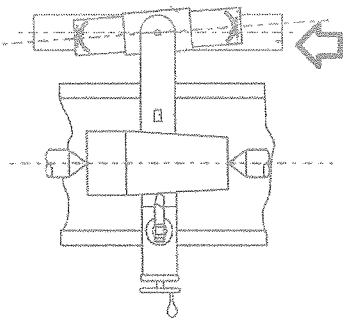

(i)

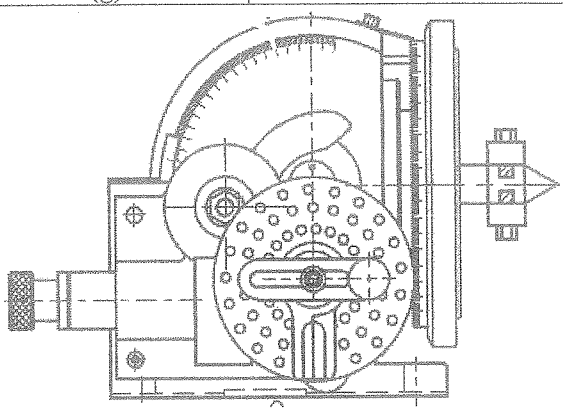

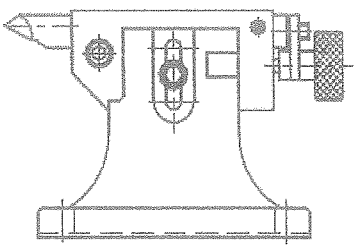

(j)